| | REVISION DESCRIPTION | CHECK | APP | DATE | REV. NOTICE. NO |
|---|---|---|---|---|---|
| △1 | | | | | |
| △2 | | | | | |
| △3 | | | | | |

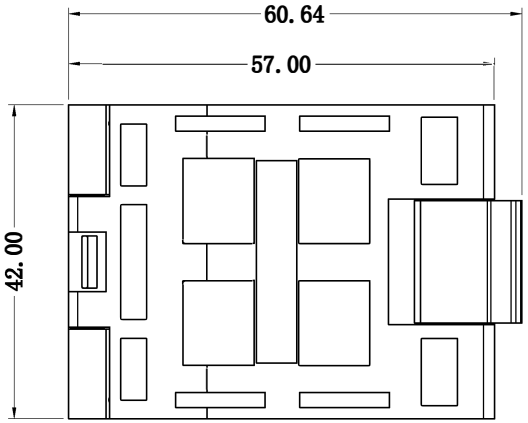


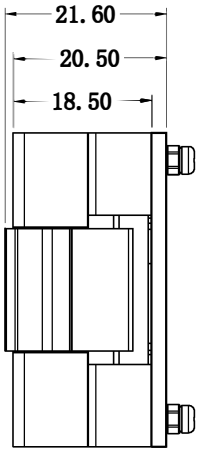


PCB PATTERN (TOP VIEW)

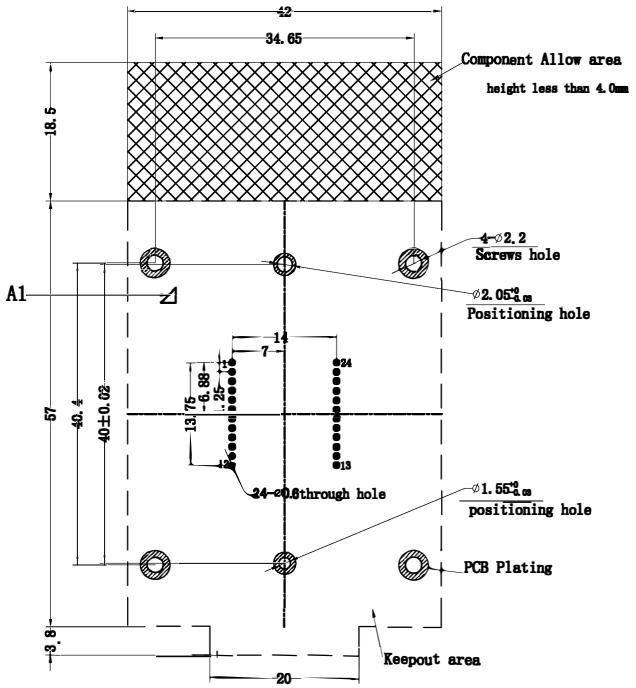


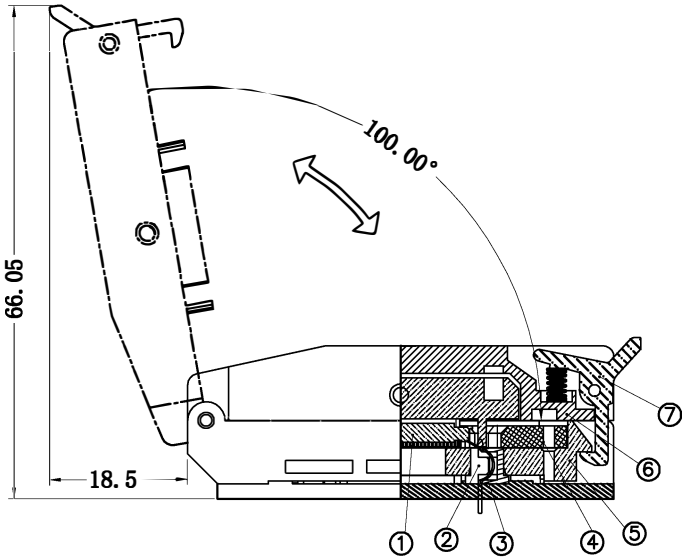


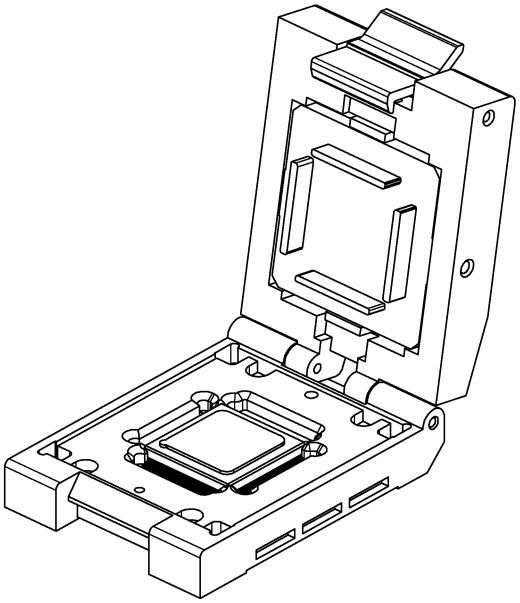

APPLICABLE IC

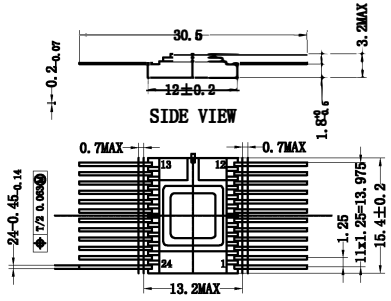


SPECIFICATIONS:

1 Rating Current: 3A
2 Contact Resistance: ≤100mΩ
3 Insulation impedance: DC500V 1000兆欧以上
4 Voltage withstand: AC700V For 1Min
5 Temperature: -45℃～+155℃
6 LifeSpan: ≥10000times
7 Operating Pressure: ≤35g/Pin

| No | Part Name | Material | QTY | TIPS |
|---|---|---|---|---|
| 7 | Lock buckle | PPS | 1 | Black |
| 6 | TOP Lid | PPS | 1 | Black |
| 5 | pedestal | PPS | 1 | Black |
| 4 | Mid Lid | PPS | 1 | Black |
| 3 | Spring Pin | BeCu | 24 | Yellow |
| 2 | Rubber core | PPS | 1 | Black |
| 1 | IC | / | 1 | / |

| | | | |
|---|---|---|---|
| PROJECTION | | GENERAL TOLERANCES | ±0.10 |
| | | R E V | A |
| DIMENSION: | mm | SCALE: | 1:1 |
| APP: | | DATE: | |
| CHECK: | | DATE: | |
| DEGK: QF | | DATE: | |

| | |
|---|---|
| TIT IE | P370 2 SOCKET |
| CLASS | FP24-1.25-0130-TNH (37X15. |
| DRW. NO | |

ТЕСТ Компонент